OPERATING MANUAL FOR GEM MULTIDECK DISPLAY CABINETS

IMPORTANT INFORMATION (PLEASE RETAIN THIS DOCUMENT)

This Manual covers the installation, operation and routine maintenance requirements for the following Williams Refrigeration products:

R-Series / M-Series / G-Series

A refrigerated display cabinet is designed to maintain the temperature of pre-chilled produce within the temperature range set out below.

Please read this Manual carefully before connecting the appliance.

Provided the instructions in this Operating Manual are read and implemented correctly, the optimum performance and reliability of your equipment should be maintained.

We assume the installer, user and service provider are appropriately trained, skilled and competent to properly and safely carry out the work, and will use the necessary safety equipment, and take the necessary precautions required of their intended work.

Improper installation, maintenance or repair may put the user at considerable risk.

GEM Temperature Range	GEM Climate Class	GEM dB(A)
+3°C(37°F) / +5°C (41°F)	3M2	70

Regulations
Declaration of Conformity:

Refrigerant Designation	Global Warming Potential
HFC/HFO - R452a	2140
HC - R290	3

Williams Refrigeration declares that all products manufactured by Williams Refrigeration comply with the above directives as they apply to those products, and those products are therefore declared to be in conformity with the provisions of the above legislation.

Model No.: .....

Serial No.: .....

INDEX

IMPORTANT SAFETY INFORMATION	PAGE 3
MPORTANT REFRIGERATION AWARENESS	PAGE 4
INSTALLATION	PAGES 5-9
CONTROLLER	PAGE 10
ROUTINE MAINTENANCE / CLEANING	PAGES 11
BREAKDOWN AND TROUBLE SHOOTING	PAGE 12
WIRING DIAGRAMS	PAGES 14-15
WARRANTY	PAGES 16-17

KEY SAFETY CONSIDERATIONS

- The Maximum evenly distributed shelf load weights are: Glass: 20kg
Metal: 40kg
- Only fit a new light tube of the same specification and wattage.
- Please note the further safety advice in respect of the movement, maintenance and safe disposal of this appliance.
- Appliances can be equipped with a remote condensing unit. Sizing, selection and installation of the remote condensing unit must be undertaken by a competent and qualified refrigeration engineer.

IMPORTANT SAFETY INFORMATION

Warning:
Do not store explosive substances such as aerosol cans with a flammable propellant in this appliance.

Warning:
Do not use electrical appliances inside the food storage compartments of this appliance.

Warning:
Keep ventilation openings of the appliance enclosure or the structure of built in equipment, clear of obstruction.

Warning:
Do not use mechanical devices or other means to accelerate the defrosting process.

Warning:
Do not damage the refrigerant circuit, i.e. pipe work or components.

ELECTRICAL

The appliance must be disconnected from its power source during cleaning; when maintenance and the replacement of parts is required, the equipment must be safely disconnected and isolated from the power supply using a lock-off system at the isolation device.

It is advised that the electrical supply to the equipment is protected by an appropriately selected Residual Current Device (RCD) with a rating no greater than 30mA. RCD's should be tested at least every three months to ensure they are functioning correctly.

If the supply cord is damaged, it must be replaced by a service engineer or other qualified person. Only the supply cord supplied by Williams Refrigeration must be used.

Fixed wiring appliances (those not supplied with a plug) shall incorporate a switch disconnector to meet the specification of IEC 60947; this is to be installed within the fixed wiring installation in accordance to the local wiring rules / regulation to provide all pole disconnection of the power supply.

IMPORTANT REFRIGERATION AWARENESS FOR SYSTEMS CHARGED WITH FLAMMABLE REFRIGERANTS

WARNING

SYSTEM CHARGED WITH FLAMMABLE REFRIGERANT

REFRIGERANT:R290 (REFRIGERANT GRADE PROPANE ONLY)
Ensure all operatives are aware the appliance contains an environmentally friendly but flammable refrigerant.

Technical Safety and Advice
All appliances are only to be installed by persons who are appropriately trained, skilled and competent to properly and safely carry out the work, and serviced by qualified engineers for the handling of hydrocarbon refrigerants

Ensure procedures are adhered to in the following Operating Manual.

Should a suspected leak become apparent, immediately evacuate the area and remotely switch off the cabinet.

DO NOT remove the plug from the socket as this could act as a source of ignition. Leaking refrigerant may ignite and cause injuries.

Keep ventilation openings in the appliance enclosure or in the structure clear of obstruction.

Contact Williams Refrigeration on +44 (0) 1553 817 000, stating the suspected fault.

INSTALLATION

SAFE REMOVAL & DISPOSAL OF REDUNDANT APPLIANCES

Refrigeration appliances contain refrigerant and gases in their insulation and must be disposed of professionally by a licensed waste management contractor.

Please ensure that old or redundant refrigeration appliances are disposed of safely and legally. It is recommended that doors are removed prior to disposal in order to ensure safety.

UNPACKING

Care should be taken during the unpacking process as the appliance could be temporarily unstable. Installation and unpacking should only be undertaken by a competent person.

Remove all external and interior packing and accessories. Ensure all such material is disposed of safely.

Check that no damage has occurred to the appliance, the tubing of the refrigeration system, power cable and plug top during transit. If damage has occurred do not use the appliance.

We recommend that prior to use, the appliance is cleaned with a mild soap solution and then wiped dry.

VENTILATION

The appliance should be installed in a dry place, avoiding direct exposure to sunlight and sources of heat or draughts including air currents such as radiators, fans, air conditioning units and doors etc. It is essential to ensure that the room in which the equipment is installed is adequately ventilated.

Multidecks generate a considerable amount of heat and, if operated in a small unventilated room will quickly cause the room temperature to become excessive. This could cause the motor to overheat and possibly damage the compressor. At the very least, such an installation will cause the unit to use an excessive amount of electricity.

In addition to ventilation in a room, please ensure, if positioned against a wall, there is a clearance at the back of the appliance of at least 80mm for the condensing unit to operate effectively and efficiently.

Do not block vents by stacking boxes on top or in front of the unit as this could affect performance and give rise to safety risk.

REMOTE REFRIGERATION SYSTEMS

Appliances can be equipped with a remote condensing unit. Sizing, selection and installation of the remote condensing unit must be undertaken by a competent and qualified refrigeration engineer.

A separate power supply is needed for the remote condensing unit.

CASTORS & ADJUSTABLE POSITIONING FEET

The appliance should stand level to ensure the correct operation.

The appliance is fitted with castors as standard. When the appliance has been positioned please ensure the adjustable feet are fixed in position into the rear of the base frame.

MAINS CONNECTION

Commercial kitchens and foodservice areas are environments where electrical appliances may be located close to liquids, or operate in and around damp conditions or where restricted movement for installation and service is evident.

Great care must be exercised at all times when installing, operating, or servicing this appliance.

For appliances fitted with a moulded plug for safety, ensure that the mains power cable is extended free from the refrigeration system to avoid entanglement. Please note that the R180 and M180 series Multidecks have 2 power supply cords. Both power supply cords should be connected to the same double outlet socket. If a plug or mains cable requires replacement, contact the Williams Spares Office on +44(0)1553 817017.

The installation of a fixed appliance and periodic inspection should only be undertaken by a qualified, skilled, and competent electrician; and connected to the correct power supply suitable for the load as stipulated by the appliance data label.

The electrical installation and connections should meet the necessary requirements to the local electrical wiring regulations and any electrical safety guidelines.

All appliances rely upon a suitable connection to earth to ensure safe operation. If in doubt, contact a qualified, skilled, and competent electrician before using the appliance.

We recommend:-

- **Supplementary electrical protection with the use of a residual current device (RCD)**
- **Fixed wiring appliances incorporate a locally situated switch disconnector to connect to, which is easily accessible for switching off and safe isolation purposes. The switch disconnector must meet the specification requirements of IEC 60947**

If the appliance has been laid on its back or tipped, DO NOT switch on immediately. Leave in an upright position for at least 3 hours before switching on.

Your attention is drawn to:-BS 7671:2018 - Guidance note 8 - 8.13 : Other locations of increased risk
It is recognised that there may be locations of increased risk of electric shock other than those specifically addressed in Part 7 of BS 7671. Examples of such locations could include laundries where there are washing and drying machines in close proximity and water is present, and commercial kitchens with stainless steel units, where once again, water is present.

Where because of the perception of additional risks being likely, the installation designer decides that an installation or location warrants further protective measures, the options available include:

- Automatic Disconnection of Supply (ADS) by means of a residual current device having a residual operating current not exceeding 30mA;
- Supplementary protective equipotential bonding; and
- Reduction of maximum fault clearance time.

The provision of RCDs and supplementary bonding must be specified by the host organisation's appointed installation designer or electrical contractor and installed by a suitably qualified and competent electrician so as to comply with Regulations 419.2 and 544.2. RCD's should be tested at least every three months to ensure they are functioning correctly.

LOCKING FACILITY

On models with a locking facility, it is recommended that the key be removed from its lock during normal working use. This will prevent bending or breaking of the key which could result in the lock having to be replaced.

NIGHT BLINDS AND ROLLER SHUTTERS

To help conserve energy, maintain product temperature and conceal product from view during out of hours operation, a night blind or roller shutter can be selected.

Night Blind

The night blind is positioned by pulling down in a single smooth motion and hooked in place. To open the blind, pull it slightly down and release. The soft close mechanism will then slowly retract the blind into its upper location.

Roller Shutters

The roller shutter incorporates a lock to secure the Multideck when not in retail service. To operate the roller shutter pull down in a level and single motion. The roller shutter is retracted by being pushed upwards. Keys should be retained in a safe and secure location.

SAFE STORAGE AND DISPLAY

The appliance should not be used to store or display flammable or explosive substances including aerosols.

A refrigerated display cabinet is designed to hold the temperature of pre chilled and packaged foods and beverages. Please ensure produce is at its desired temperature before loading into the display cabinet.

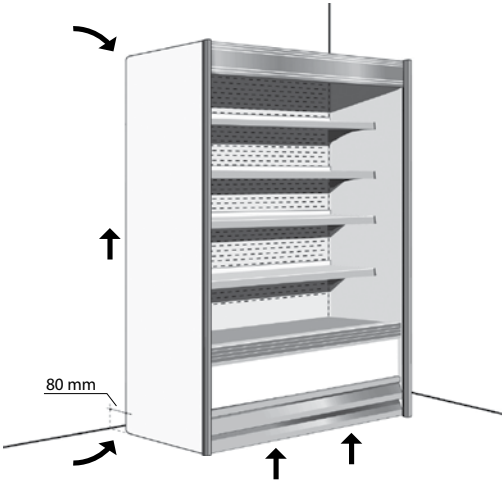

Condenser hot air outlet

SPACERS FIXING

Before positioning the Multideck be sure that the two spacers are fixed to the base.

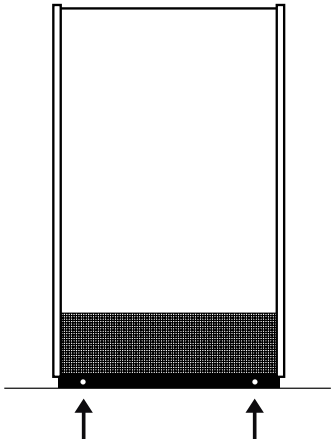

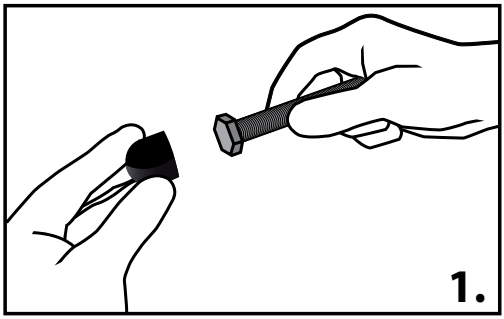

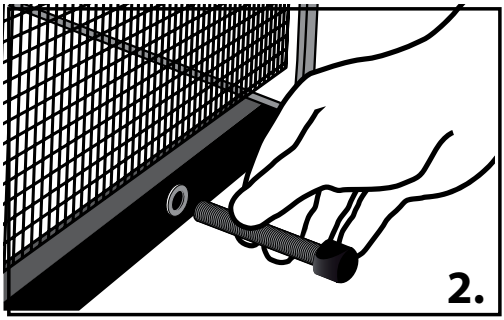

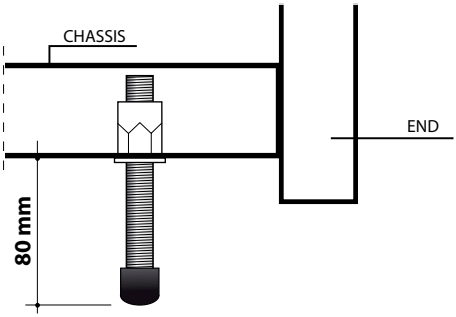

Standard cabinet

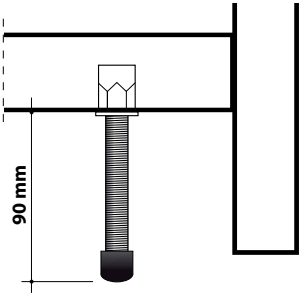

Roller shutter cabinet

SHELF / SLIDE FITTING

Hook the brackets into the bracket holders on the internal back panel. Ensure brackets are parallel and level after fitting.

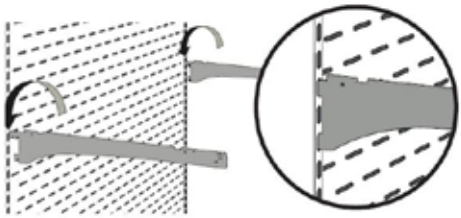

Position the shelf on the brackets. Ensure all shelves are fitted so they are in contact with the back panel.

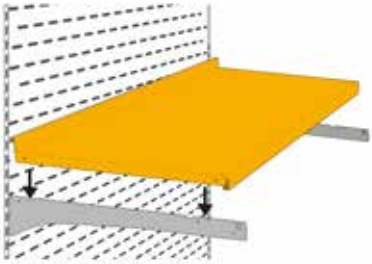

TICKET STRIP FITTING

Insert the ticket holder in the outer groove of the shelf bracket.

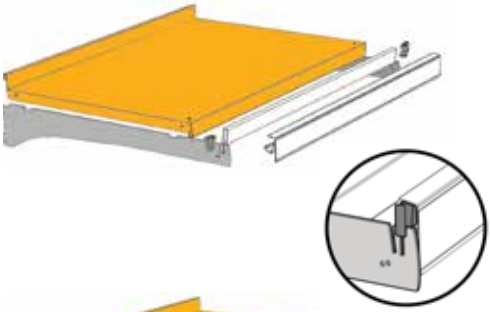

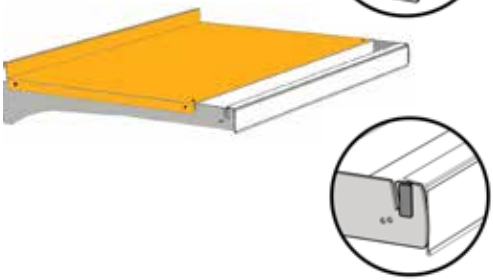

In case of tilted shelves, insert the ticket holder in the inner groove of the bracket.

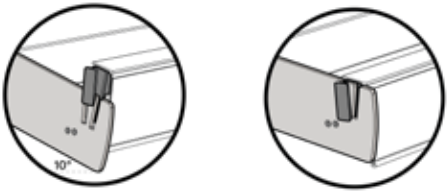

To remove the ticket holder, push it towards the top.

VERTICAL DEFLECTORS

Please ensure the vertical deflectors are fitted to the end panels as illustrated in the below picture, using the screws provided.

The left and right vertical deflectors need to be installed, in order for the display cabinet to operate at its optimum, with respect to cabinet internal temperature and energy efficiency.

SHELF WEIGHT DISTRIBUTION

Before loading, allow the appliance to reach its normal operating temperature.

When loading the appliance, please ensure that its load is equally distributed throughout and ensure a gap of 80mm between products and the shelf above, to ensure effective air circulation. (See Fig. 1)

The maximum evenly distributed shelf load weights are:
Glass: 20kg
Metal: 40kg

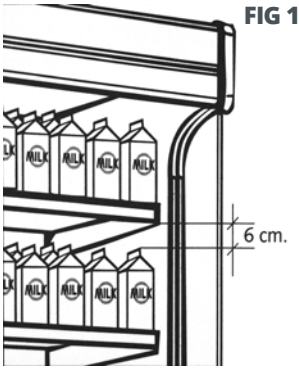

FIG 1.

CONTROLLER

CONTROLLER / DISPLAY

The display should be checked daily to ensure that the correct temperature is being maintained.

SET POINT ADJUSTMENT

Touch the switch for 3 seconds to make the panel active.

Touch the switch. After the first touch the and ON/OFF ( ) switches are ready for the set-point adjustment.

By touching the switch, the adjustment is confirmed.

LIGHTS OUT

Touch the PROGRAM switch for 3 seconds to make the panel active.

Touch the switch in order to turn on or turn off the lights.

UNIT POWER UP

Touch the PROGRAM switch for 3 seconds to make the panel active.

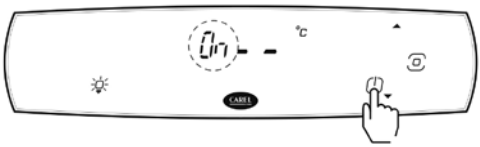

Touch the switch.

Wait for a few seconds and the unit is ON.

UNIT SWITCH OFF

Touch the switch for 3 seconds to make the panel active.

Touch the switch. The unit is OFF

APPLIANCE ROUTINE MAINTENANCE / CLEANING

ROUTINE MAINTENANCE

Regular servicing of the appliance should be undertaken to ensure correct operation, it is functioning as intended and safe to use.

Safely disconnect the appliance from the power suppy before cleaning, servicing or undertaking general maintenance.

This appliance must be maintained at regular intervals. The frequency of maintenance will depend upon your specific use and location. The maximum service interval should be 12 months.

Service and maintenance should only be undertaken by suitably qualified, trained and competent engineers.

We recommend servicing in accordance with SFG20 Maintenance Schedules and as a minimum, after **4,500** hours of use, or annually, whichever comes first and that a maintenance contract be arranged with an appointed service contractor. Visits may then be made at agreed intervals to carry out required safety tests, functional checks, adjustments and repairs.

CLEANING

Always wear appropriate personal protective equipment (PPE) when cleaning the appliance. Care should be taken for parts with possible sharp edges.

NB: Abrasive or corrosive materials / cleaners should never be used. This includes chlorine based chemical cleaners. These can damage surfaces and cause corrosion.

If the cabinet exterior is looked after correctly it will retain an “as new” finish for many years. Normal day to day cleaning should be carried out with a soft cloth and soapy water. If the product’s exterior has a stainless steel finish occasionally use a good stainless steel polish for protection. Do not wash the cabinet with a hose or spray. (Fig.2).

Shelving can be removed for easy cleaning, cabinet interior should be cleaned regularly with warm soapy water and a soft cloth.

Dry thoroughly afterwards.

FIG 2.

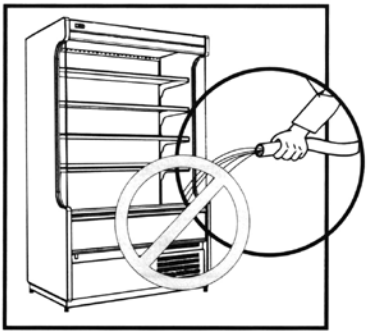

CONDENSER CLEANING

Regular maintenance should be carried out by competent / trained personnel. The condenser is part of the refrigeration unit and is located in the unit compartment and requires cleaning, approximately every two months.

To achieve access to the condenser you must remove the front grill. (Fig.3)

FIG 3.

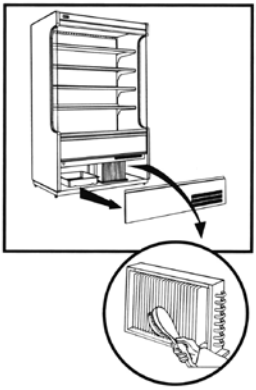

Brush fins vertically with a stiff brush, taking care not to damage them or to push dirt / dust further in, and then vacuum away.

Remember to reconnect the mains supply once finished.

If there are further grease deposits still remaining on the condenser call your Service Provider to carry out a full service.

NB: Non-compliance may invalidate your Warranty.

Take care not to damage any electrical connections and cables during removing and the cleaning process.

REPLACING THE LIGHTING LAMP (HORIZONTAL ILLUMINATION)

- Disconnect the appliance from the electrical supply by unplugging it.
- Unplug the connector from the LED lamp and remove it.
- Fit the new LED lamp. Only fit a new light of the same specification and wattage.
- Reconnect the mains supply once finished.
- Safely handle and dispose of the redundant LED light.

BREAKDOWN AND TROUBLE SHOOTING

BREAKDOWN

In the event of a breakdown, you must immediately report any damage or defect arising with the appliance. Unsafe equipment is dangerous. Do not use the appliance. Isolate the power supply and contact Williams Refrigeration or your appointed Service Provider.

When calling, please advise model and serial number. This information can be found on the data plate. It should also be noted on the cover of this Manual. Please ensure that all redundant parts are disposed of safely and legally.

TROUBLE SHOOTING INFORMATION

Fault Display	Possible Cause	Action
Cabinet not operating	No power supply	Check fuse or power source
		Ensure that the general switch is on
Cabinet not maintaining temperature	1. Dirty condenser	Clean
	2. Air circulation restricted	Remove restriction
	3. Check that shelves and goods are properly installed and loaded	
	4. Check that the cabinet is not near draughts or heat sources	
	5. Check that the air return or the air curtain is not blocked	

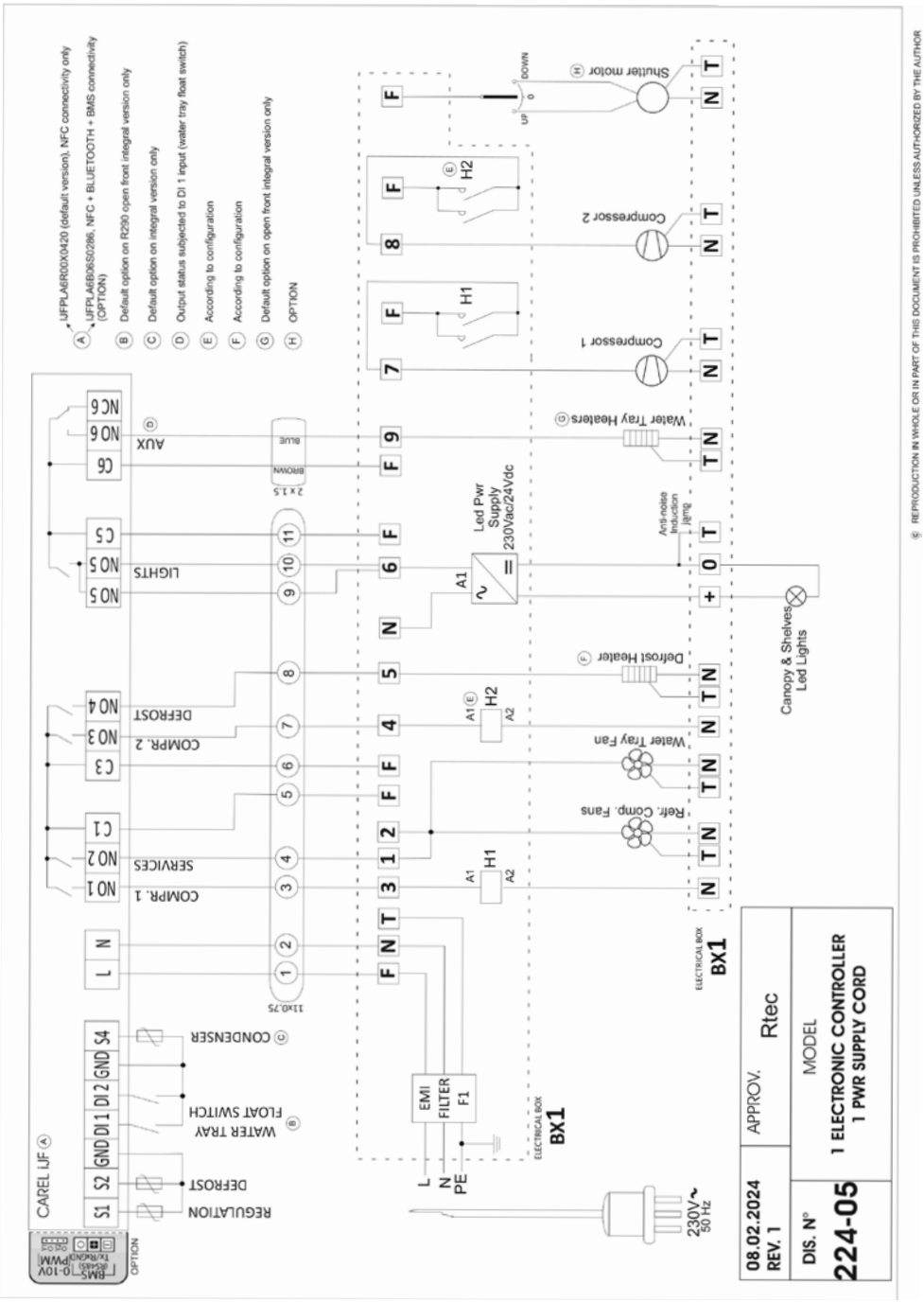
A UIFPLA6R00X0420 (default version), NFC connectivity only
A UIFPLA6B06S0286, NFC + BLUETOOTH + BMS connectivity (OPTION)
B Default option on R290 open front integral version only
C Default option on integral version only
D Output status subjected to DI 1 input (water tray float switch)
E According to configuration
F According to configuration
G Default option on open front integral version only
H OPTION
CAREL UIF A
S1 S2 GND DI 1 DI 2 GND S4
REGULATION
DEFROST
WATER TRAY FLOAT SWITCH B
CONDENSER G
BMS 0-10V
OPTION
L N
NO 1 NO 2 C1
NO 3 NO 4 C3
NO 5 NO 5 C5
NO 6 NO 6 C6
COMPR. 1
SERVICES
COMPR. 2
DEFROST
LIGHTS
AUX D
11x0.75
2 x 1.5
BROWN
BLUE
EMI FILTER F1
L N PE
230V~ 50 Hz
ELECTRICAL BOX BX1
H1
H2
A1 A2
Led Pwr Supply 230Vac/24Vdc
Anti-noise Induction Ballast
Shutter motor H
UP DOWN
Compressor 2
Compressor 1
Water Tray Heaters G
Defrost Heater F
Water Tray Fan
Refr. Comp. Fans
Canopy & Shelves Led Lights
08.02.2024
REV. 1
APPROV. Rtec
DIS. N° 224-05
MODEL
1 ELECTRONIC CONTROLLER
1 PWR SUPPLY CORD
© REPRODUCTION IN WHOLE OR IN PART OF THIS DOCUMENT IS PROHIBITED UNLESS AUTHORIZED BY THE AUTHOR

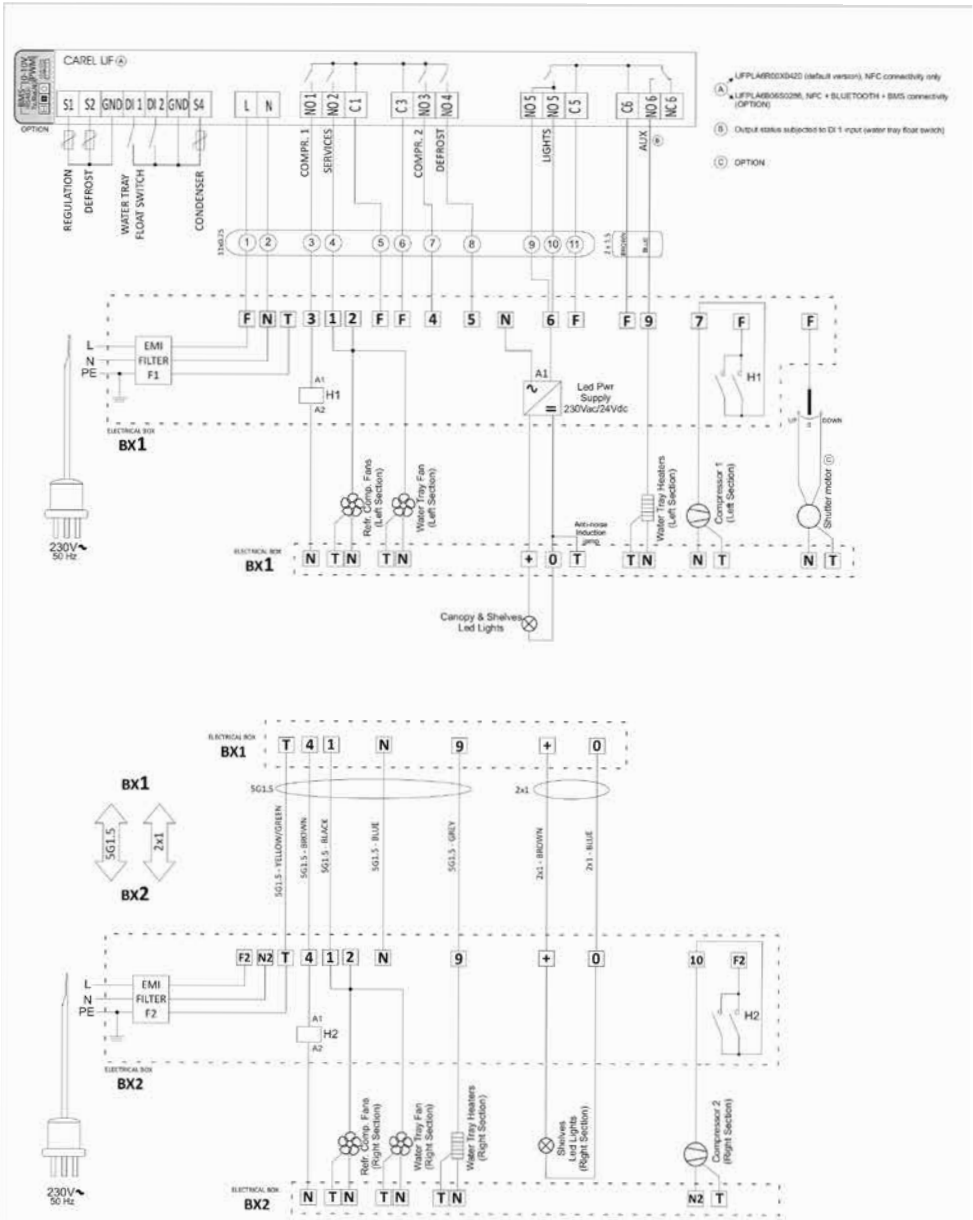

© REPRODUCTION IN WHOLE OR IN PART OF THIS DOCUMENT IS PROHIBITED UNLESS AUTHORIZED BY THE AUTHOR

PARTS & LABOUR WARRANTY POLICY - UK ONLY

Our warranty applies to equipment manufactured by Williams Refrigeration and equipment bearing the Williams name plate and serial number identification tag.

We undertake, in conjunction with the supplying agent, distributor or representative, to repair free of charge during our standard business hours any such piece of equipment or part thereof used which is found to be faulty in either materials or workmanship subject to the further conditions below:-

WARRANTY TERMS AND PRODUCTS COVERED

We offer **a 24 months Warranty** from our original date of sale with the following Williams equipment:

1. Garnet / Zircon / Jade / Amber (stainless) / Mobile Heated/ Mobile Refrigerated.
2. Reach-in Blast Chillers / Reach-in Blast Chiller Freezers / Blast Chiller WTBC70.
3. Opal / Emerald / Onyx / Aztra / Salad Counters / UBC / Chef's Drawers / Fry Station Drawer.
4. Crystal Bakery Cabinets.
5. Meat Ageing Refrigerator.
6. Medi+ Cabinets.

We offer a **12 months Warranty** from our original date of sale for all other Williams equipment including:

1. All Modular Products (including coldrooms).
2. Remote Systems.
3. Bottle Coolers / Glass Froster.
4. GEM Multidecks (including heated) and merchandiser cases.
5. GEM product range.
6. Bottle Well / Meat Freezer Well.
7. Thermowell.
8. Non standard and other products.
9. Front of House display cases.
10. White Goods.

WARRANTY TERMS

Our warranty is offered where the equipment has been installed correctly and has not been subject to misuse or abuse and is functioning correctly.

The equipment was purchased by the authorised supplying distributor direct from Williams Refrigeration and not through a wholesaler or other supplier whose warranty terms may be different.

The Warranty Policy shall be non-transferable.

Replacement of defective equipment can only be made with the approval of Williams Refrigeration.

Any repair under warranty will only be carried out with the product in its position of operation or in a suitable location on the customer's premises. If the product has to be removed for security or any other reason, this will be subject to additional charge (may include hydrocarbon charged equipment).

Warranty work will be covered by Williams Refrigeration or by one of its appointed service agents between the hours of 8.00am and 5.00pm Monday to Friday. Any works undertaken outside of these hours are chargeable.

RESPONSE TIME

We aim to respond to all warranty calls within 3 working days and will endeavour to respond next working day where practical.

CLAIMS PROCEDURE

If a customer wishes to make a claim under the terms of this warranty, the following procedure should be observed:

1. Contact the supplying agent, representative or distributor.
2. Quote the equipment model, serial number and date of installation. The serial number is located on the product identification plate inside the cabinet, modular product door frame or similar location. It is recommended that operators should also record the serial number on the operating instruction booklet supplied with the product.
3. Contents risk and insurance responsibility remains at all times with the customer.

EXCEPTIONS TO STANDARD WARRANTIES

1. The Standard warranty applies to equipment located in Mainland GB only and excludes locations subject to restricted or secure access,offshore and marine applications.

Additional time and travel charges may be applied to the following locations – Isle of Wight, Channel Islands, Isle of Man, Northern Ireland and Scottish Isles.

2. Any fault that is not reported within 10 working days of being discovered.

3. Service calls to equipment under warranty, or service calls made under chargeable arrangements will be carried out in accordance with standard conditions of sale. Unless otherwise specified, a maximum of 15 minutes of administrative time, not spent directly carrying out servicing work, is provided for within the supply. Any requirement for staff attending the call to spend greater time than 15 minutes due to administrative requirements, such as on waiting time or security clearance, or health and safety risk assessments, will be chargeable at our prevailing rate.

   We reserve the right to apply Time Travel & Call out charges if no fault is found with the product or access is either restricted or denied to our attending engineer.

4. No claim shall exceed the original selling price.

5. Claims for Food and / or contents stored in the equipment supplied (including pharmaceutical or other items) and any consequential loss how so ever arising are excluded under our warranty terms.

6. Components including gaskets, doors, drawers, handles, shelves, tray slides, all internal fixings, plug and lead, connectors, the outer shell, castors / legs, food probes, refrigerant and blockages as well as consumable items such as (but not limited to) batteries, fuses, light bulbs, printer cartridges, keys, glass and paper roll.

7. Equipment manufactured to the customers' own design, Williams Refrigeration will not be liable for any defect, non performance or improper operation of the equipment arising from any drawing design or specification supplied by the customer, their representative or agent.

8. Second hand equipment.

9. The customer uses or installs the equipment in such a way that it exceeds its design envelope or operates the equipment at control parameters other than those provided as standard factory settings.

10. The customer fails to observe commonly accepted operating practices.

11. The customer has not properly cleaned or maintained the equipment or carried out necessary servicing, including cleaning of the condenser, in accordance with instructions, literature or directions issued by Williams Refrigeration. (Operating Instructions are supplied with all equipment but also available at www.williams-refrigeration.co.uk).

12. Equipment fails through improper installation by others, misuse, abuse, accidental damage, power loss or fluctuations, fire, flooding or acts of god.

13. Any third party item(s) connected to the equipment that may affect performance.

14. The customer permits persons other than those authorised by Williams Refrigeration to perform or affect repairs or adjustments to the equipment.

15. If authorised representatives of Williams Refrigeration are denied full and free rights of access to the equipment for inspection during normal business hours as previously stated.

16. If repairs are made using spare parts or replacement items not supplied or preauthorised by Williams Refrigeration.

17. The initial equipment supply date shall apply for warranty validity for the subsequent supply of replacement of parts or products.

EXTENDED WARRANTY

Extended Warranty offers the opportunity to protect your equipment (subject to conditions outlined) for an additional period of up to 5 years inclusive of original warranty periods.

Should you require Extended Warranty, state on your order or notify the Dealer or Williams Sales Manager at the time of purchase and they will be able to arrange it for you.

To ensure your Extended Warranty Policy remains valid, at least one maintenance / service visit per year must take place in years 2, 3, 4 and 5.

For further information or clarification please call 01553 817000 or email to info@williams-refrigeration.co.uk or write to Williams Refrigeration, Bryggen Road, King's Lynn, Norfolk, PE30 2HZ

Williams Refrigeration
Bryggen Road
North Lynn Industrial Estate
King's Lynn
Norfolk PE30 2HZ
Sales Tel: +44 1553 817000
Sales Fax: +44 1553 817111
Spares Tel: +44 1553 817017
Spares Fax: +44 1553 817020

info@williams-refrigeration.co.uk
www.williams-refrigeration.co.uk

Williams Silver Frost
2 rue Conventionnel Huguet
23000 GUERET
France
Tel: +33 5 55 52 27 88
Fax: +33 5 55 62 10 61

info@williams-refrigeration.fr
www.williams-refrigeration.fr

Williams Dubai
PO Box 342011
B-05, Light Industrial Units
Phase-3, Dubai Silicon Oasis
Dubai, United Arab Emirates
Tel: +971 4326 3313

sales@williams-dubai.com

Williams Refrigeration Australia
38-42 Gaine Road
Dandenong South, Victoria 3175
Australia
Tel: +61 3 8787 4747
Fax: +61 3 8787 4787

sales@williamsref.com.au
www.williams-refrigeration.com.au

Williams Refrigeration Hong Kong
Unit C, 12/F., Roxy Industrial Centre,
58 - 66 Tai Lin Pai Road, Kwai Chung,
New Territories, Hong Kong
Tel: +852 2407 5422
Fax: +852 2407 3767

sales@williams-hongkong.com
www.williams-refrigeration.com.hk

www.williams-refrigeration.com

Williams Refrigeration is a trading name of AFE Group Limited. Registered in England & Wales under Registered Number 3872673. Registered Office Address - Bryggen Road, North Lynn Industrial Estate, King's Lynn, Norfolk, PE30 2HZ